NOTES:

1. UNIT MUST BE GROUNDED FOR OPERATORS SAFETY.
2. DASHED LINES INDICATE WIRING NOT SUPPLIED BY SIMPLEX.
3. CONTROL WIRE – #16 AWG, 105 DEG. C
4. CONTINUITY FROM TB'CF' 1–3 INDICATES COOLING FAILURE
   CONTINUITY FROM TB'CF' 1–2 INDICATES NORMAL OPERATION
   DRY CONTACT RATINGS: 2A – 125Vac; 4A – 30Vdc
5. LOAD IS DISENGAGED WHEN CONTACT IS OPEN
   UNLESS LOAD DUMP BYPASS SWITCH IS ENGAGED.

CODE	WIRE GAUGE	INSULATION TEMPERATURE RATING	WIRE COLOR	SIMPLEX PART NUMBER
YV	20 AWG	80°C	VIOLET (PURPLE)	25512140
YN	20 AWG	80°C	YELLOW	25512150
YX	20 AWG	80°C	ORANGE	25512155
YT	20 AWG	105°C	GB ANSI TYPE J	25512400
AA	16 AWG	105°C	BLACK	25518200
AB	16 AWG	105°C	RED	25518100
AD	16 AWG	105°C	WHITE	25518000
AK	16 AWG	105°C	RED W/WHITE STRIP	25518310
AL	16 AWG	105°C	BLACK W/WHITE STRIP	25518320
BM	14 AWG	105°C	GREEN	25525250
CE	12 AWG	150°C	BLACK	25531630
CF	12 AWG	150°C	RED	25531620
CG	12 AWG	150°C	BLUE	25531640
CH	12 AWG	150°C	WHITE	25531610

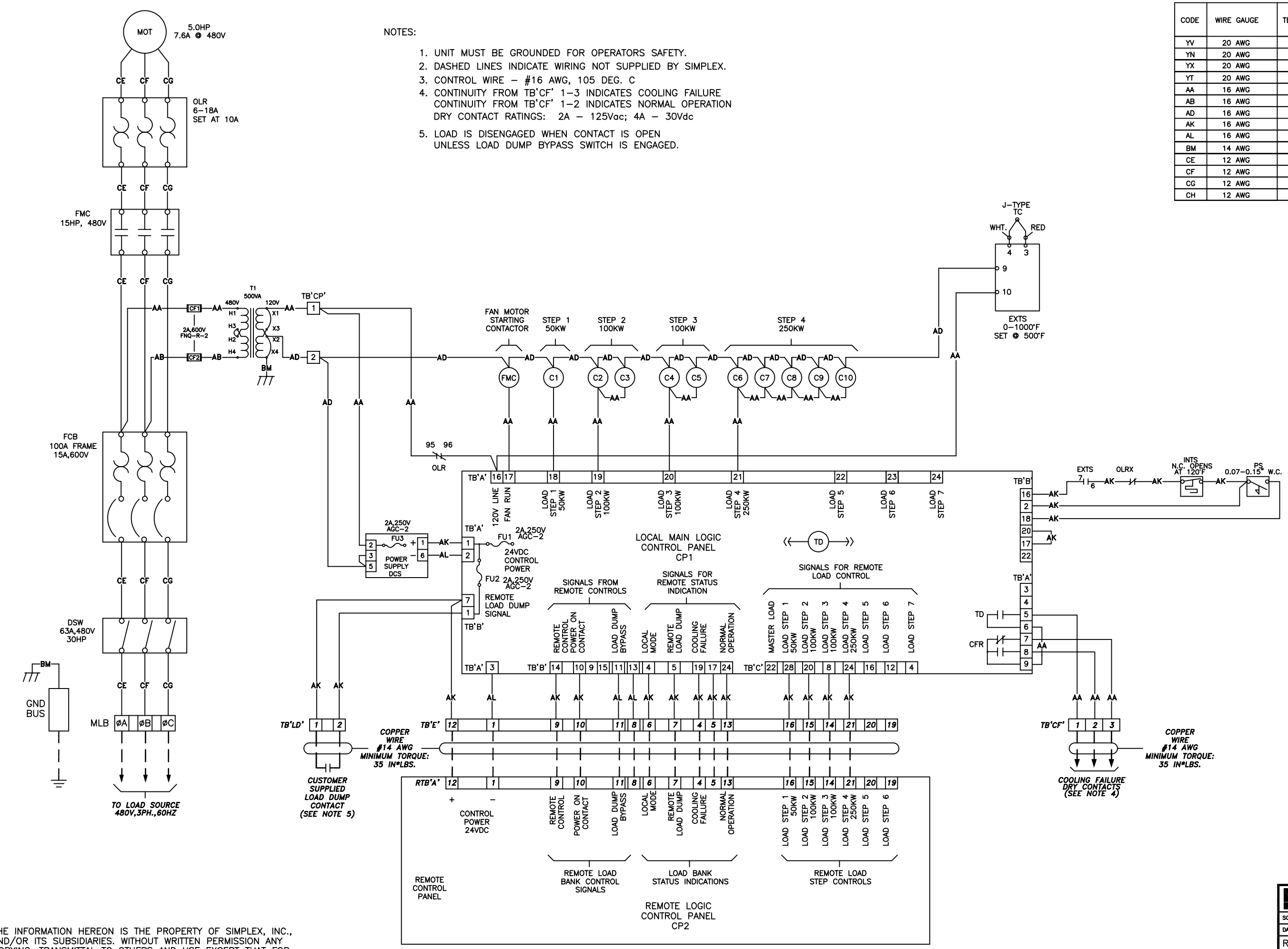

DISK S/N: 4473

SIMPLX® SPRINGFIELD, ILLINOIS

SCALE :	APPROVED BY :	DRAWN BY : CJG
DATE : 01–03–06		REVISED :

RESISTIVE LOAD BANK 500KW,480V,3ø,60Hz — NEPTUNE–500 UL CONTROL SECTION

W.O. #60723–05–43 — DRAWING NUMBER 47B154273

THE INFORMATION HEREON IS THE PROPERTY OF SIMPLEX, INC., AND/OR ITS SUBSIDIARIES. WITHOUT WRITTEN PERMISSION ANY COPYING, TRANSMITTAL TO OTHERS AND USE EXCEPT THAT FOR WHICH IT IS LOANED IS PROHIBITED.
© 2005 SIMPLEX, INC. ALL RIGHTS RESERVED